laboratory structured reporting

29 maart 2018

Dr. Tom Fiers - Universitair Ziekenhuis Gent
Dr. Philippe Cauchie – C.H.U. de Charleroi

www.plan-egezondheid.be
2013-2018

EPD
Medicatieschema
Elektronisch voorschrift

Delen
Samenwerken
Multidisciplinair

Toegang voor patiënt
Communicatie
Opleiding, incentives

Standaarden
Administratieve vereenvoudiging
Traceerbaarheid

eHealthbox
Registers
Mobile Health

Evolutie naar eHealth gecodeerd lab verkeer

KB

- **Fase1: connectie op HUB's in 'leesbaar' formaat (KB)**
  - Implementatie (klein) deel van HUB Cookbook
- **Fase 2a:** Werken aan mapping lab-eigen codering met nationale codering voor de meest gebruikte concepten & de eenheden & kiemen
- **Fase 2b:**
  - Versturen uit lab via eHbox en ontvangen in huisartspakket met het gestructureerd nieuw eHealth lab formaat, waarin gebruik van de standaard codes
  - Kunnen antwoorden aan de HUB's in gestructureerd formaat naast het antwoorden in leesbaar formaat
  - Epilab (healthdata)
- **Fase 3-…**
  - Aanvragen , Interlab , selectief bevragen resultaten,…

Gestructureerde lab resultaten. Quid?

- **Nieuw formaat (vervangt de rest) : IHE-CDA XML**

- **Gecodeerde concepten: volgorde voorkeur gebruik:**
  - LOINC (als in nationale subset)
  - Identifier uit nationale codelijst als geen LOINC maar wel in subset
  - Bestaande code (bv medidoc, ACTH)
  - Eigen code

- **Gestructureerde eenheden: UCUM**
- **Gecodeerde (hoofd)titels: LOINC , eigen codering**
- **Gecodeerde kiemnamen: SNOMED**
- **Gecodeerde staalnamen: SNOMED**

Coding systems: LOINC

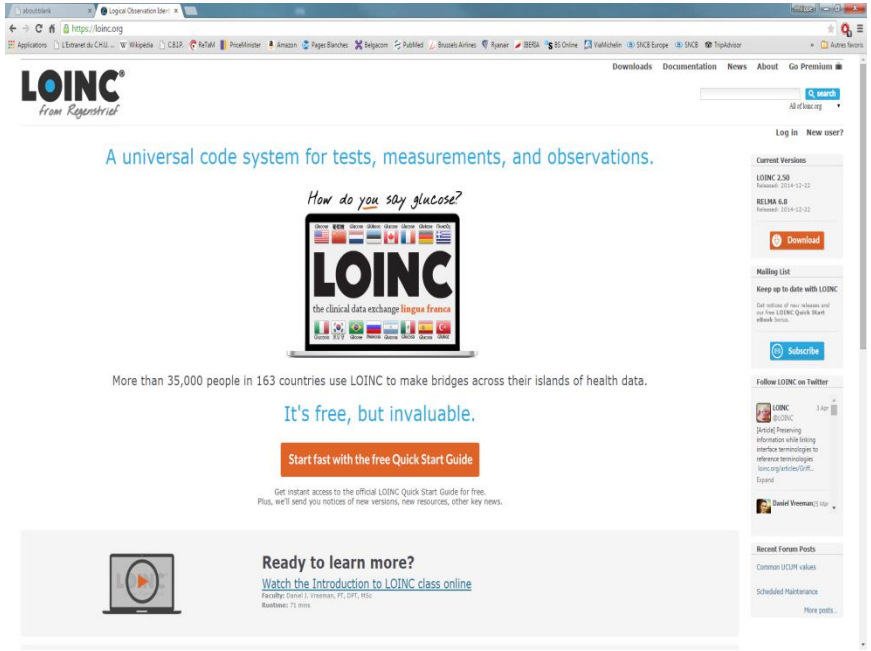

1996: 200 codes

- VA, medpath, mayo, IU

2017:

- > 80.000 codes
- World leading standard

Clin Chem. 1996 Jan;42(1):81-90.

Logical observation identifier names and codes (LOINC) database: a public use set of codes and names for electronic reporting of clinical laboratory test results.

Forrey AW[1], McDonald CJ, DeMoor G, Huff SM, Leavelle D, Leland D, Fiers T, Charles L, Griffin B, Stalling F, Tullis A, Hutchins K, Baenziger J.

LOINC (2.56)

Each code record includes six fields for the unique specification of each identified single test, observation, or measurement:

1. Component- what is measured, evaluated, or observed
2. Kind of quantity- characteristics of what is measured, such as length, mass, volume, timestamp and so on
3. Time aspect- interval of time over which the observation or measurement was made
4. System- context or specimen type within which the observation was made
5. Type of scale- the scale of measure. The scale may be quantitative, ordinal, nominal or narrative
6. Type of method- procedure used to make the measurement or observation

24031-7	ACTIVE	14-3-3 Ag	ACnc	Pt	CSF	Ord	IB	CREUTZI	CJ; CJD; Creutzfe
36924-9	ACTIVE	14-3-3 protein	MCnc	Pt	CSF	Qn			; Prot; PR; CJ; CJD
51833-2	ACTIVE	14-3-3 protein	ACnc	Pt	CSF	Ord	IB		; Prot; PR; CJ; CJD
44277-2	ACTIVE	15 Beta, 17 Alpha-Dihydroxypregnanolone/Creatinine	MCrto	Pt	Urine	Qn			; 15B,17aDiOHpre
30977-3	ACTIVE	15 day report	ACnc	Pt	Form	Ord		VAERS F	; Day type; Arbitr
61106-1	ACTIVE	16p.11.2 chromosome region deletion+duplication	Prid	Pt	Bld/Tiss	Nom	Molgen		Chromosomes; 16
44280-6	ACTIVE	17 alpha-Hydroxypregnanolone/Creatinine	MCrto	Pt	Urine	Qn			; 17A-OH-hpregn
32854-2	ACTIVE	17-Hydroxyprogesterone	ACnc	Pt	Bld.dot	Ord		CAH SCF	; 17OHP; Hydroxy

Slide: Dr. Ph. Cauchie

LOINC vs SNOMED

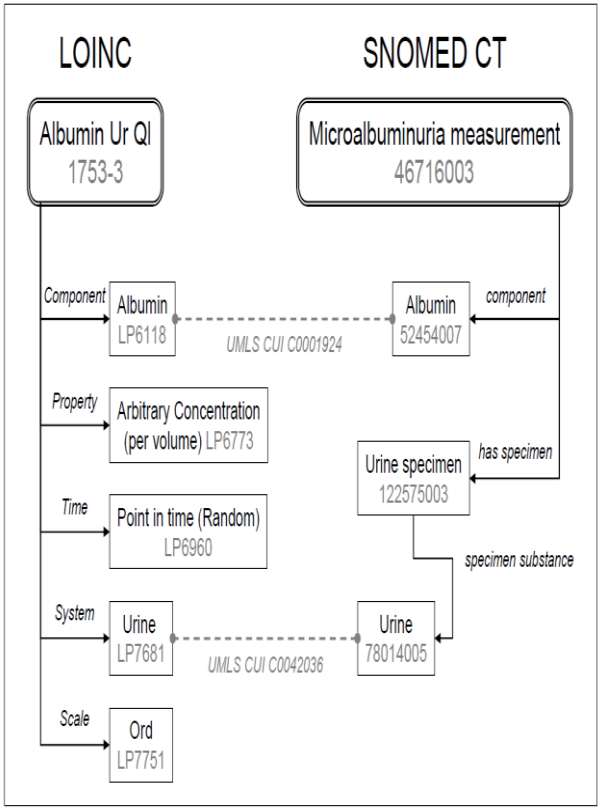

- **LOINC: each item (= LOINC code) is a precise analysis**
  - on a specific sample (±)
  - by a specific method (±)
  - at a specific time
  - has a result with a precise dimension
  - This fits to the structure of the database of the Laboratory Information Systems
- **SNOMED:**
  - impossible to define most entities by a single code
  - Depends on pre/post-coördination
  - Incompatible with the way an LIS works
- **The Regenstrief Institute published a first mapping table**

Slide: Dr. Ph. Cauchie

Waarom een nationale subset ipv volle LOINC ?

- Risico op foute mapping zeer groot
- Visualisatie zou lukken, maar vergelijkbaarheid zou moeilijk worden
- Cumulatief
- Gebruik in lab2lab en aanvragen
- Gebruik voor queries over laboratoria heen
- Gebruik voor registries zoals Healthdata

LOINC : the dark side

- **Powerful but complex:**
  - Multiple samples, methods, units, ...
  - The difference between some codes is not always easy to understand
  - eg 68 times ‘glucose’, 734 starting with ‘glucose’,
- **80,000 items but still incomplete**
  - Codes are still missing
  - eg CKD-EPI, Quick vs Owren PT (Thrombotest), Willebrand factor « activity »…..
  - LOINC growth depends on the requests ….
- **Dynamic tests and profiles: complex, many options ....**
- **Bacteriology**
  - Pathogens’ codification (→ SNOMED)
  - Reconstruction of antibiotic susceptibility charts in EMR
- **Request codes: multiple possibilities**

Slide: Dr. Ph. Cauchie

ReTaM

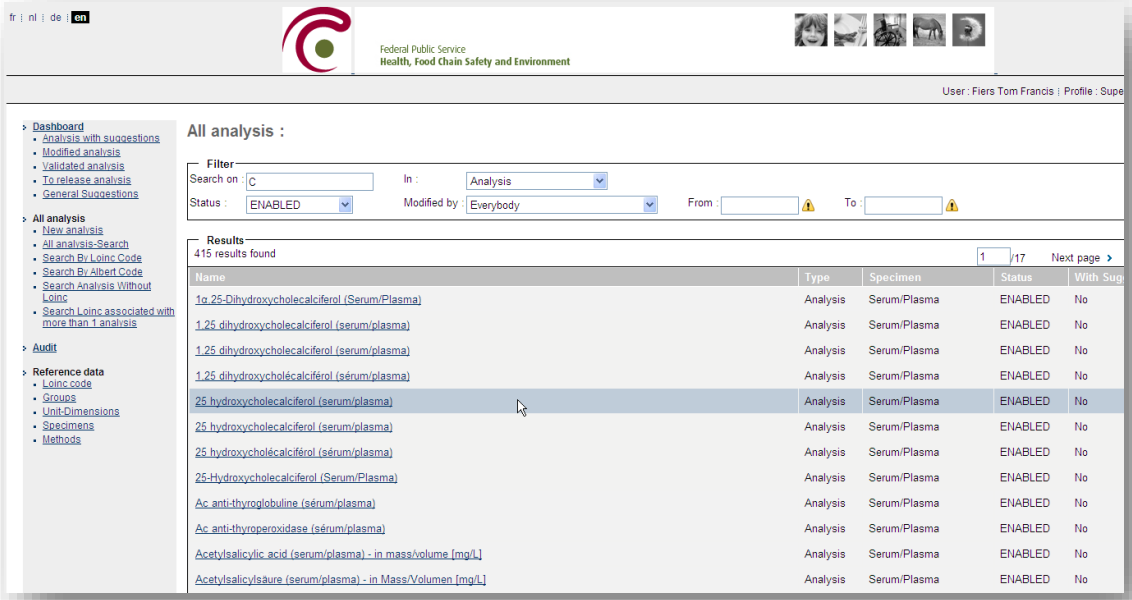

- **Authentic source in eHealth**
- **governed by FOD, top 99% of most common concepts covered (700+)**
- **Link to LOINC, specimen (and method if applicable)**
- **Synonyms, Notes , remarks , (optional) grouping, preferred units,…**
- **Double validation of codes in progress + release**

https://www.vas.ehealth.fgov.be/webretam/retam/

Retam extractions: currently on FOD demand from Smals

	A	B	C	D	E	F	G	H	I	J	K	L	M	N
1	ALBERT CO	LOINC COD	LABEL FR	LABEL DU	LABEL GE	LABEL EN	SPECIMEN	SPECIMEN	SPECIMEN	SPECIMEN	UNIT FR	UNIT DU	UNIT GE	UNIT EN
2	24616	21112-8	Patient, da	Patiënt geb	Patient Gel	Patient dat	patient	patiënt	Patient	Patient	Temps	Tijd	Zeit	Time
3	24617	18833-4	Poids du pa	Patiënt gev	Patient Kör	Patient boc	patient	patiënt	Patient	Patient				
4	24618	8302-2	Taille du pa	Patiënt len	Größe des	Patient len	patient	patiënt	Patient	Patient				
5	24619		GROUPES S	BLOEDGRO	Blutgruppe	BLOOD GROUP								
6	24621	978-7	Rhésus D A	Rhesus D A	Rhesus D A	Rhesus D A	érythrocyte	rode bloed	Erythrozyte	Erythrocyte	Unités arbi	Arbitraire e	Willkürlich	Arbitrary C
7	24622	972-0	Ag Rhesus	Rhesus Du	Rhesus Du	Rhesus Du	érythrocyte	rode bloed	Erythrozyte	Erythrocyte	Unités arbi	Arbitraire e	Willkürlich	Arbitrary C
8	24624	1021-5	Rhésus gra	Rhésus gro	Rhesus E A	Rhesus E A	érythrocyte	rode bloed	Erythrozyte	Erythrocyte	Unités arbi	Arbitraire e	Willkürlich	Arbitrary C
9	24625	1159-3	Ag Rhésus	Rhesus klei	Rhesus klei	Rhesus littl	érythrocyte	rode bloed	Erythrozyte	Erythrocyte	Unités arbi	Arbitraire e	Willkürlich	Arbitrary C
10	24626	1165-0	Ag Rhésus	Rhesus klei	Rhesus klei	Rhesus littl	érythrocyte	rode bloed	Erythrozyte	Erythrocyte	Unités arbi	Arbitraire e	Willkürlich	Arbitrary C
11	24627	10331-7	Phénotype	Rhesus sys	Rh Gruppe	Rhesus gro	sang	bloed	Blut	Blood	Texte	Tekst	Text	Text
12	24628	960-5	Antigène R	Rhesus Cw	Rhesus Cw	Rhesus Cw	érythrocyte	rode bloed	Erythrozyte	Erythrocyte	Unités arbi	Arbitraire e	Willkürlich	Arbitrary C
13	24629	1096-7	Antigène K	Kell Ag (roc	Kell Ag (Ery	Kell Ag (ery	érythrocyte	rode bloed	Erythrozyte	Erythrocyte	Unités arbi	Arbitraire e	Willkürlich	Arbitrary C
14	24634	785-6	Teneur Cor	Gemiddeld	Mittleres K	Mean corp	érythrocyte	rode bloed	Erythrozyte	Erythrocyte	Masse	Massa	Masse	Entitic Mas
15	24650	4679-7	Réticulocyt	Reticulocyt	Retikulozyt	Reticulocyt	sang	bloed	Blut	Blood	Fraction de	Fractie van	Anzahl frac	Number Fr
16	24651	14196-0	Réticulocyt	Reticulocyt	Retikulozyt	Reticulocyt	sang	bloed	Blut	Blood	Nombre/vo	Aantal/volu	Anzahl/vol	Number Co
17	24654	26478-8	Formule le	Witte bloe	Differential	White bloo	sang	bloed	Blut	Blood	Fraction de	Fractie van	Anzahl frac	Number Fr
18	24655	13046-8	Formule le	Witte bloe	Differential	White bloo	sang	bloed	Blut	Blood	Fraction de	Fractie van	Anzahl frac	Number Fr
19	24656	26485-3	Formule le	Witte bloe	Differential	White bloo	sang	bloed	Blut	Blood	Fraction de	Fractie van	Anzahl frac	Number Fr
20	24657	30180-4	Formule le	Witte bloe	Differential	White bloo	sang	bloed	Blut	Blood	Fraction de	Fractie van	Anzahl frac	Number Fr
21	24658	26450-7	Formule le	Witte bloe	Differential	White bloo	sang	bloed	Blut	Blood	Fraction de	Fractie van	Anzahl frac	Number Fr
22	24659	26511-6	Formule le	Witte bloe	Differential	White bloo	sang	bloed	Blut	Blood	Fraction de	Fractie van	Anzahl frac	Number Fr
23	24660	26508-2	Formule le	Witte bloe	Differential	White bloo	sang	bloed	Blut	Blood	Fraction de	Fractie van	Anzahl frac	Number Fr
24	24661	26507-4	Formule le	Witte bloe	Differential	White bloo	sang	bloed	Blut	Blood	Nombre/vo	Aantal/volu	Anzahl/vol	Number Co
25	24662	26505-8	Formule le	Witte bloe	Differential	White bloo	sang	bloed	Blut	Blood	Fraction de	Fractie van	Anzahl frac	Number Fr
26	24663	30451-9	Formule le	Witte bloe	Differential	White bloo	sang	bloed	Blut	Blood	Fraction de	Fractie van	Anzahl frac	Number Fr

± 1000 concepten gecodeerd

Downloads & Mapping of analytes

ALBERT CO	LOINC CO	LABEL FR	LABEL DU	LABEL GE	LABEL EN	SPECIMEN	SPECIMEN	SPECIMEN	SPECIMEN	UNIT FR	UNIT DU	UNIT GE	UNIT EN	METHOD F	METHOD D	METHOD G	METHOD E	ANALYSIS	ACTH
24621	978-7	Rhésus D	Rhesus D	Rhesus D	Rhesus D	érythrocyt	rode bloe	Erythrozyt	Erythrocyt	Unités arb								quest /	AA20
24624	1021-5	Rhésus gr	Rhésus gr	Rhesus E	Rhesus E	érythrocyt	rode bloe	Erythrozyt	Erythrocyt	Unités arb								quest /	AA50
24625	1159-3	Ag Rhésus	Rhesus kl	Rhesus kl	Rhesus lit	érythrocyt	rode bloe	Erythrozyt	Erythrocyt	Unités arb								quest /	AA60
24626	1165-0	Ag Rhésus	Rhesus kl	Rhesus kl	Rhesus lit	érythrocyt	rode bloe	Erythrozyt	Erythrocyt	Unités arb								quest /	AA70
24627	10331-7	Phénotyp	Rhesus sy	Rh Gruppe	Rhesus gr	sang	bloed	Blut	Blood	Texte								quest /	AA80
24650	4679-7	Réticuloc	Reticuloc	Retikuloz	Reticuloc	sang	bloed	Blut	Blood	Fraction d								quest /	AB69
24651	14196-0	Réticuloc	Reticuloc	Retikuloz	Reticuloc	sang	bloed	Blut	Blood	Nombre/								quest /	AB70
24654	26478-8	Formule l	Witte blo	Differenti	White blo	sang	bloed	Blut	Blood	Fraction d								sponse	AC15
24655	13046-8	Formule l	Witte blo	Differenti	White blo	sang	bloed	Blut	Blood	Fraction d								sponse	AC16
24660	26508-2	Formule l	Witte blo	Differenti	White blo	sang	bloed	Blut	Blood	Fraction d								sponse	AC41
24662	26505-8	Formule l	Witte blo	Differenti	White blo	sang	bloed	Blut	Blood	Fraction d								sponse	AC42
24667	26484-6	Formule l	Witte blo	Differenti	White blo	sang	bloed	Blut	Blood	Nombre/								sponse	AC52
24668	26444-0	Formule l	Witte blo	Differenti	White blo	sang	bloed	Blut	Blood	Nombre/								sponse	AC53
24669	28541-1	Formule l	Witte blo	Differenti	White blo	sang	bloed	Blut	Blood	Fraction d								sponse	AC55

Codes voor Properties in codeersysteem LOINC

Waarde	Record
6765-2	17OHPREG
51677-3	17OHPREG60
32660-3	6-TH
1825-9	A1AT
48415-4	A1MCKR
46723-3	A1MIGL
2685-6	A1ZGP
1835-8	A2MAGL
1737-6	ABLAL
1893-7	ABLARG
1908-3	ABLASP
1913-3	ABLASZ
2936-3	ABLSE
3008-0	ABLTR
3079-1	ABLTYR
3118-7	ABLVA
7789-1	ACANT
2742-5	ACE
2141-0	ACTH
13914-7	ADENOK

Belgian subset: where are we ?

- **Main Objectives:**
  - Cover most of top 400 common analytical test results
- **What will be covered in due time**
  - Requests: some are already there
  - Low volume and very specialised tests
- **What will not be covered**
  - Remarks
  - Analytes & ratio’s etc without broad scientific support or deprecated
  - Less popular detailed function tests: loinc generic function test code + info in message.

Is a “limited” subset of around 1000 enough?

- **Test with 2 lab’s (1university, 1 extramural) report hitlist**

- **Excluded from estimation:**

  germs, remarks, information , requests, non codable, some deprecated, APD

- **Results:**
  - Top 100: 99% present*
  - Top 300: 97% present*

* “enabled” or “validated”

Units: UCUM *(Unified Code for Units of Measurement)*

- **As LOINC maintained by Regenstrief institute**
- **Advantages:**
  - Structured
  - Related
  - Designed for lab results

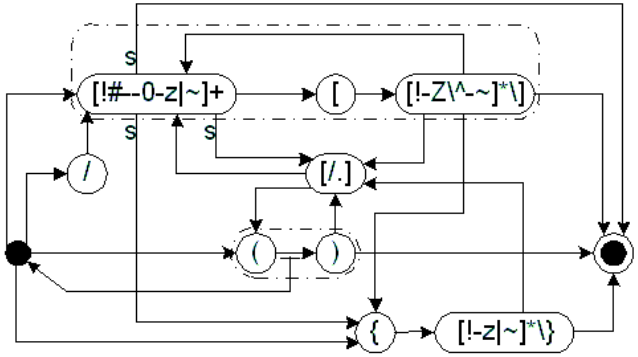

http://unitsofmeasure.org/ucum.html

mg/(kg.min)	mg/kg/min 10*-6/min	milligram per kilogram and minute	mass dose rate per patient body mass	$1.66666666666667 \times 10^{-8}$	s-1
mg/d		milligram per day		$1.15740740740741 \times 10^{-8}$	g.s-1
mg/dL		milligram per deciliter		10	m-3.g
mg/h		milligram per hour		$2.77777777777778 \times 10^{-7}$	g.s-1
mg/kg	10*-6	milligram per kilogram		10-6	1
mg/L		milligram per liter		1	m-3.g
mg/m2		milligram per square meter	mass dose per patient body surface area	0.001	m-2.g
mg/m3		milligram per cubic meter		0.001	m-3.g
mg/min		milligram per minute		$1.66666666666667 \times 10^{-5}$	g.s-1
mL		milliliter		10-6	m3

UCUM

pmol/h/mg{prot}	**picomole per hour per milligram of protein**
pmol/h/mL	**picomole per hour per milliliter**
pmol/(24.h)	**picomole per 24 hour**
mL/kg/(8.h)	**milliliter per kilogram per 8 hour**
pmol/umol{creat}	**picomole per micromole of creatinine**
pmol/mg{prot}	**picomole per milligram of protein**
pmol/mL	**picomole per milliliter**
pmol/mmol{creat}	**picomole per millimole of creatinine**
pmol/min	**picomole per minute**
pmol/min/mg{prot}	**picomole per minute per milligram of protein**

CHU Charleroi LIS units have been based on UCUM

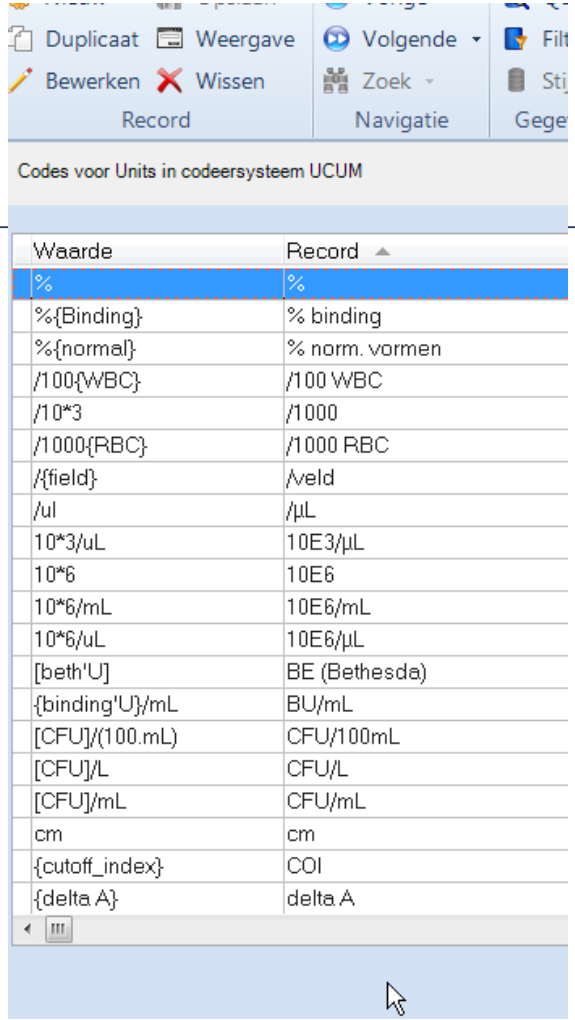

Waarde	Record
%	%
%{Binding}	% binding
%{normal}	% norm. vormen
/100{WBC}	/100 WBC
/10*3	/1000
/1000{RBC}	/1000 RBC
/{field}	/veld
/ul	/µL
10*3/uL	10E3/µL
10*6	10E6
10*6/mL	10E6/mL
10*6/uL	10E6/µL
[beth'U]	BE (Bethesda)
{binding'U}/mL	BU/mL
[CFU]/(100.mL)	CFU/100mL
[CFU]/L	CFU/L
[CFU]/mL	CFU/mL
cm	cm
{cutoff_index}	COI
{delta A}	delta A

UZG: ± 110 units mapped

Helpful site: http://download.hl7.de/documents/ucum/ucumdata.html

Slide: adapted from Dr. Ph. Cauchie

Structure (the message)

- **Prelude: IHE exercise**
  - Belgium CDA-LAB, Mapping/integration with Kmehr enveloppe

- **Current status: HL7V3CDA in KMEHR envelop V1.0**

- **Needed:**
  - Cookbook, business rules and examples OK
  - Validator for new messages (both P2P and WS) OK
  - Visualisation tool for messages (XSLT) OK

https://www.ehealth.fgov.be/standards/kmehr/sites/default/files/assets/labo/labomessageresultdescription_v_1_0_and_examples.zip

BEL_LABOREP_CDA_EXAMPLE_Antibiogram.xml
BEL_LABOREP_CDA_EXAMPLE_Basic.xml
Example_KMEHR_HL7_antibiogram.xml
Example_KMEHR_HL7_Basic.xml
LaboMessageResultDescription_V_1_0.pdf
Labo_visualiser_20160930.xslt
ReadMe_Instructions_for_visualiser.txt

Germs: Snomed

Duplicaat | Weergave | Volgende
Bewerken | Wissen | Zoek
Record | Navigatie

Codes voor Microorganisms in codeersysteem SNOMED

	Organism Name	NHSN Organism Code	SNOMED Concept Code	SNOMED Fully Specified Name
2	Acinetobacter baumannii	ACBA	91288006	Acinetobacter baumannii (organism)
3	Bacteroides fragilis	BF	55247009	Bacteroides fragilis (organism)
4	Burkholderia cepacia	BURCE	113669008	Burkholderia cepacia (organism)
5	Candida albicans	CA	53326005	Candida albicans (organism)
6	Candida glabrata	CG	444877006	Candida glabrata (organism)
7	Candida parakrusei	CP	61302002	Candida parapsilosis (organism)
8	Candida parapsilosis	CP	61302002	Candida parapsilosis (organism)
9	Candida paratropicalis	CT	47885008	Candida tropicalis (organism)
10	Candida tropicalis	CT	47885008	Candida tropicalis (organism)
11	Citrobacter diversus	CITKO	114264004	Citrobacter koseri (organism)

114044001	ACTBSCH
113414004	ACTEUR
877802991000087109	ACTNEU
12069003	ACTODO
40560008	ACTSP
113422006	ACTTUR
409827009	ACTURO
88529008	AEROM
427222006	AERSAN
243230001	AERUR
442683005	AGGRAPH
25223004	ALCFAE

Most : WIV-LP list, some via snomed browser
(eg ‘commensalen’ 23506009)

23506009

Normal flora	Normal flora (finding)
Pathogenic bacteria not recovered	Normal flora (finding)
Normal flora (finding)	Normal flora (finding)

Needed for message: Sample types (snomed) , Main Titles (Loinc)

Codes voor Materials in codeersysteem SNOMED

Waarde	Record
119373006	AMV
309201001	AV
122609004	BAL
258415003	BIOP
119359002	BME
119359002	BMU
708048008	C
122554006	CAP
708048008	CWEST
708048008	C_WEST
445295009	E
445295009	ECMD
445295009	EVB
445295009	EY
445295009	E_
445295009	E_VPE
703432000	F
119339001	FA
446272009	HEPAR

Codes voor Property classification nodes in codeersysteem LOINC

Waarde	Record
18716-1	ALLERGIE (scherm)
18722-9	ANDERE LICHAAMSVOCHTEN\Sperma (scherm)
18729-4	ANDERE LICHAAMSVOCHTEN\Urine (scherm)
18720-3	BLOEDSTOLLING (scherm)
18721-1	DRUG MONITORING (scherm)
18723-7	HEMATOLOGIE (scherm)
18727-8	INFECTIEUZE SEROLOGIE (scherm)
18725-2	MICROBIOLOGIE {=ifknownstring(.specimen.Variab
18719-5	SCHEIKUNDE (scherm)
18767-4	SCHEIKUNDE\Bloedgassen (scherm)
18728-6	TOXICOLOGIE BLOED-SERUM-PLASMA (scherm)

Code sets

Tools

Nieuw
Duplicaat
Bewerken
Record
Nav...
Ge...

Tabel
Property
PropertyClassificationNode

Why simultaneously codes + structured message?

- **Microbiology: or blob or detailed**

  Germ name = snomed CT

  Location = snomed CT

Labels

Label FR : Sensibilité aux antibiotiques: Ofloxacine - CMI (isolement)
Label NL : Antibiotica gevoeligheid: Ofloxacine - MIC (isolaat)
Label DE :
Label EN : Antibiotic susceptibility: Ofloxacin - MIC (isolate)

Concept Code	Concept Name	Preferred Concept Name	Code System	Value Set
713924007	Non-hemolytic Streptococcus agalactiae (organism)	Non-hemolytic Streptococcus agalactiae	SNOMED-CT	Lab Result (Streptococcus, group B)
43492007	Streptococcus agalactiae (organism)	Group B streptococcus	SNOMED-CT	Lab Result (Streptococcus, group B)
698164000	Streptococcus agalactiae serotype Ia (organism)	Streptococcus agalactiae serotype Ia	SNOMED-CT	Lab Result (Streptococcus, group B)

- **Functional tests**

Cortisol - 120min post XXX challenge (sérum/plasma) - mass/volume

Cortisol - 30min post XXX challenge (sérum/plasma) - mass/volume

Cortisol - 45min post XXX challenge (sérum/plasma) - mass/volume

Cortisol - 60min post XXX challenge (sérum/plasma) - mass/volume

Cortisol - 90min post XXX challenge (sérum/plasma) - mass/volume

Cortisol post challenge at time XXX (serum/plasma)

HL7 CDA V3 R2 message in KMEHR Wrapper

The content of the KMEHR elements sender,recipient,patient,author map with corresponding elements in the CDA (<ClinicalDocument>)

```
1   <?xml version="1.0" encoding="UTF-8"?>
2   <kmehrmessage xmlns="http://www.ehealth.fgov.be/standards/kmehr/schema/v1" xmlns:xsi="http://www.w3.org/2001/XMLSchema-instance" xsi:schemaLocation="
    http://www.ehealth.fgov.be/standards/kmehr/schema/v1>
3     <header>
4       <standard>
5         <cd S="CD-STANDARD" SV="1.18">20160601</cd>
6       </standard>
7       <!-- id maps to the value of the extension attribute in id in the root of  CDA -->
8       <id S="ID-KMEHR" SV="1.0">11530231003.20151104131800000000</id>
9       <date>2015-11-04</date>
10      <time>18:32:00</time>
11      <!-- sender maps to the custodian in CDA -->
12      <sender>
13        <hcparty>
18      </sender>
19      <!-- recipient maps to informationrecipient in CDA -->
20      <recipient>
21        <hcparty>
27        <hcparty>
32      </recipient>
33    </header>
34    <folder>
35      <id S="ID-KMEHR" SV="1.0">1</id>
36      <!-- patient maps to record target in CDA -->
37      <patient>
38        <id S="ID-PATIENT" SV="1.0">67032537742</id>
39        <firstname>Joachim</firstname>
40        <firstname>Maarten</firstname>
41        <familyname>Murat</familyname>
42        <birthdate>
45        <sex>
48      </patient>
49      <transaction>
50        <id S="ID-KMEHR" SV="1.0">1</id>
51        <cd S="CD-TRANSACTION" SV="1.0">labresult-cda</cd>
52        <date>2015-02-10</date>
53        <time>18:31:00</time>
54        <author>
68        <iscomplete>true</iscomplete>
69        <isvalidated>true</isvalidated>
70        <text-with-layout>
71
72          <!-- HL7 CDA Laboratory message - eHealth Platform -->
73          <!-- Only designed for illustration purpose. No valuable medical content. -->
74          <!-- Not representative of an exhaustive medical report. -->
75          <!-- This is an example: does not have the ambition to be comprehensive nor to address all possible scenarios -->
76          <ClinicalDocument xmlns="urn:hl7-org:v3" xmlns:xsi="http://www.w3.org/2001/XMLSchema-instance" xmlns:lab="urn:oid:1.3.6.1.4.1.19376.1.3.2" xsi:schemaLocation="urn:hl7-org:v3>
326         <!-- END OF THE HL7 CDA MESSAGE-->
327       </text-with-layout>
328     </transaction>
329   </folder>
330 </kmehrmessage>
```

[CDA]
- 1 [CODE] (LOINC code to define the report)
- 0...1[TITLE] (optional title in free text)
- 1 [COMPONENT/STRUCTUREDBODY/]
  - 1...* [COMPONENT/SECTION/] (the laboratory specialty section part)
    - 1[CODE] (LOINC code to define the laboratory specialty)
    - 0..1[TITLE] (optional title in free text)
    - 1...* [COMPONENT/SECTION/] (the report item part: zero or more specimen with 1 or more observations)
      - 1[CODE] (A first coded title to define this report item)
      - 1[ENTRY/ACT/] (the specimen act part)
        - 1[CODE] (A second coded title to define this report item)
        - 0..* [ENTRYRELATIONSHIP] (defining a specimen)
        - 1...*[ENTRYRELATIONSHIP] (defining an observation)
        - 0...*[ENTRYRELATIONSHIP/] (defining a subtitle comment)
          - 1[ACT] (subtitle comment act)
            - 1...*[ENTRYRELATIONSHIP] (defining an observation)
            - 0...*[ENTRYRELATIONSHIP] (defining a subtitle comment)

Slide obtained from Robin Bosman - eHealth

IHE-CDA

Ehealthbox: kmehr wrapper + base64


```
<entryRelationship typeCode="COMP">
  <procedure classCode="PROC" moodCode="EVN">
    <templateId root="1.3.6.1.4.1.19376.1.3.1.2" />
    <code code="33882-2" codeSystem="2.16.840.1.113883.6.1" di
    <effectiveTime nullFlavor="UNK" />
    <participant typeCode="PRD" contextControlCode="OP">
      <participantRole classCode="SPEC">
        <id root="Belgium - UZ Gent - Laboratory Specimen Iden
        <playingEntity determinerCode="INSTANCE">
          <code code="397212007" codeSystem="2.16.840.1.113883
        </playingEntity>
      </participantRole>
    </participant>
    <entryRelationship typeCode="COMP">
      <act classCode="ACT" moodCode="EVN">
        <templateId root="1.3.6.1.4.1.19376.1.3.1.3" />
        <code code="SPRECEIVE" codeSystem="1.3.5.1.4.1.19376.1
        <effectiveTime nullFlavor="UNK" />
      </act>
    </entryRelationship>
  </procedure>
</entryRelationship>
<entryRelationship typeCode="COMP">
  <procedure classCode="PROC" moodCode="EVN">
```



```
<?xml version="1.0"?>
<ADR xmlns:xsd="http://www.w3.org/2001/XMLSchema" xmlns:xsi="ht
  <Addressee>
    <Quality>DOCTOR</Quality>
    <Identifier>14572071862</Identifier>
    <EhboxIdType>UZGENT</EhboxIdType>
    <FirstName>Tom</FirstName>
    <LastName>Fiers</LastName>
  </Addressee>
  <Subject>UZ Gent - Labo Klinische Biologie - 180223-0171</Sub
  <Patient>
    <INSS>12345602546</INSS>
    <FirstName>Xdtest</FirstName>
    <LastName>Xdtestcozohub</LastName>
  </Patient>
  <Attachment>
    <Content>PD94bWwgdmVyc2lvbj0iMS4wIj8+DQo8Q2xpbmljYWxEb2N1bW
1ZT0iMjAxODAyMjY5MDkwNjU0KzAxMDAiIC8+DQogIDxjb25maWRlbnRpYWxpdH
0ZXN0Y296b2h1YjwvZmFtaWx5Pg0KICAgICAgICAgIDxnaXZlbj5YZHRlc3Q8L2
hYkZvcm1hdHM8L3NvZnR3YXJlTmFtZT4NCiAgICAgIDwvYXNzaWduZWRBdXRob3
gbnVsbEZsYXZvcj0iTkkiIC8+DQogICAgICA8cmVjZWl2ZWRPcmdhbml6YXRpb2
pbHkgLz4NCiAgICAgICAgICA8Z2l2ZW4gLz4NCiAgICAgICAgPC9uYW1lPg0KIC
jaWF0ZWRFbnRpdHkgY2xhc3NDb2RlPSJBR05UIj4NCiAgICAgIDxhZGRyIG51bG
sYXNzQ29kZT0iRE9DQk9EWSIgbW9vZENvZGU9IkVWTiI+DQogICAgICA8Y29tcG
xIiAvPg0KICAgICAgICAgICAgICAgIDxhY3QgY2xhc3NDb2RlPSJBQ1QiIG1vb2
gICA8L29ic2VydmFOaW9uPg0KICAgICAgICAgICAgICAgICAgPC9lbnRyeVJlbG
gICAgICAgICA8Y29kZSBjb2RlPSIzOTcyMTIwMDciIGNvZGVTeXN0ZW09IjIuMT
gICAgIDwvZW50cnlSZWxhdGlvbnNoaXA+DQogICAgICAgICAgICAgICAgICA8ZW
gY29kZVN5c3RlbT0iMi4xNi44NDAuMS4xMTM4ODMuNi45NiIgY29kZVN5c3RlbU
NCiAgICAgICAgICAgIDwvc2VjdGlvbj4NCiAgICAgICAgICA8L2NvbXBvbmVudD
    <Name>IHE_CDA_180223-0171.xml</Name>
    <MimeType>application/xml</MimeType>
    <FunctionalType>cda-xml</FunctionalType>
  </Attachment>
  <MessageId>KLBIO_180223-0171</MessageId>
</ADR>
```



```
Laboratorium v
UZ Gent - Inga
C. Heymanslaan
Erkenningsnumm
```


UZ GENT

VOLLEDIG

Ordernr: 180212-3167
Naam: Xdtestcozohub Xdtest
Straat: C. Heymanslaan 10
9000
België
Geslacht: Man
Leeftijd: 6/04/2012
UZNr: 120406045A84
Uw Ref.:


```
CI001 Diverse prestatie
00000295000
De Pintelaan 185
9000
België (BE)
```



```
.4.1.19376.1.3.1.2" />
System="2.16.840.1.113883.6.1" di
="UNK" />
D" contextControlCode="OP">
ode="SPEC">
Z Gent - Laboratory Specimen Identification" extension="180223017101" />
inerCode="INSTANCE">
03" codeSystem="2.16.840.1.113883.6.96" codeSystemName="SNOMED-CT" />
```


Analyse		Resultaat	Eenheid
INFECTIEUZE SEROLOGIE			
Toxoplasma IgM	H	16.3	{ratio}
Positief			
Toxoplasma IgG aviditeit		35.0	%
Borderline			
Toxoplasmose IgG avidity:			
Referentiewaarde: Een waarde > 40% sluit een primaire infectie uit,			


```
de="COMP">
odCode="EVN">
.6.1.4.1.19376.1.3.1.3" />
" codeSystem="1.3.5.1.4.1.19376.1.5.3.2" codeSystemName="IHEActCode" />
avor="UNK" />
</act>
</entryRelationship>
</procedure>
```

Status en resources

- **Momenteel piloot :**
  - beperkte schaal minimaal HUB(s), minimaal ZH lab's, minimaal extramurale, minimaal 2 HA pakketten
  - 8 scenarios
  - Coördinatie bij eHealth.

- **Resources:**

https://www.ehealth.fgov.be/standards/kmehr/en/page/retam-exports

https://www.ehealth.fgov.be/standards/kmehr/en/transactions/laboratory-result-cda

UCUM: http://unitsofmeasure.org/ucum.html

Kiemen: WIV-LP snomed lijst (en/of http://browser.ihtsdotools.org/?)

The pilot phase

A series of laboratory protocols exploring the different cases of lab results transmission : List of proposed scenarios (non exhaustive)

- **Several structured reports , each with a least 10 hematology/hemostasis/chemistry analysis**
  - One or more report with multiple samples
  - One or more including different coding level
    - Analysis **with LOINC code** & unit in UCUM
    - Analysis **without LOINC code** but unit in UCUM
    - Analysis without LOINC code and without unit in UCUM
  - One or more including subcontracted analyzes
- **One or more with a bacteriology result with 3 germs, including culture and antibiogram**
- **Each of these reports has to show all clinical pertinent information (units, ref ranges etc**
- **reports will be available structured and in pdf/TXT readible format + to be compared with GP-EPR presentation**
- **Reports with**
  - Modified results
  - Results with comments

Timing - Roadmap

Finalise usable code-set & distribution (LOINC, UCUM Snomed)	done
Finalise message & prep work & distribution package	done
POC with some Lab's / SW vendors / HUB 8 scenarios	Q1-2 18
Structured Attribute for intrahub service	ongoing
Part of modular accreditation of SW vendors & rollout	18m
Need for consultable registry with production ready GP's	?
No big bang but gradual Phase-out/Phase-in to GP's	?